TDA7383

4 x 30W QUAD BRIDGE CAR RADIO AMPLIFIER

- HIGH OUTPUT POWER CAPABILITY:
  4 x 35W/4Ω MAX.
  4 x 30W/4Ω EIAJ
  4 x 22W/4Ω @ 14.4V, 1KHz, 10%
  4 x 18.5W/4Ω @ 13.2V, 1KHz, 10%
- CLIPPING DETECTOR
- LOW DISTORTION
- LOW OUTPUT NOISE
- ST-BY FUNCTION
- MUTE FUNCTION
- AUTOMUTE AT MIN. SUPPLY VOLTAGE DETECTION
- DIAGNOSTICS FACILITY FOR:
  – CLIPPING
  – OUT TO GND SHORT
  – OUT TO V_S SHORT
  – THERMAL SHUTDOWN
- LOW EXTERNAL COMPONENT COUNT:
  – INTERNALLY FIXED GAIN (32dB)
  – NO EXTERNAL COMPENSATION
  – NO BOOTSTRAP CAPACITORS

PROTECTIONS:

- OUTPUT SHORT CIRCUIT TO GND, TO V_S, ACROSS THE LOAD

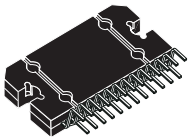

FLEXIWATT25

ORDERING NUMBER: TDA7383

- VERY INDUCTIVE LOADS
- OVERRATING CHIP TEMPERATURE WITH SOFT THERMAL LIMITER
- LOAD DUMP VOLTAGE
- FORTUITOUS OPEN GND
- REVERSED BATTERY
- ESD PROTECTION

DESCRIPTION

The TDA7383 is a new technology class AB Audio Power Amplifier in Flexiwatt 25 package designed for high end car radio applications.

BLOCK AND APPLICATION DIAGRAM

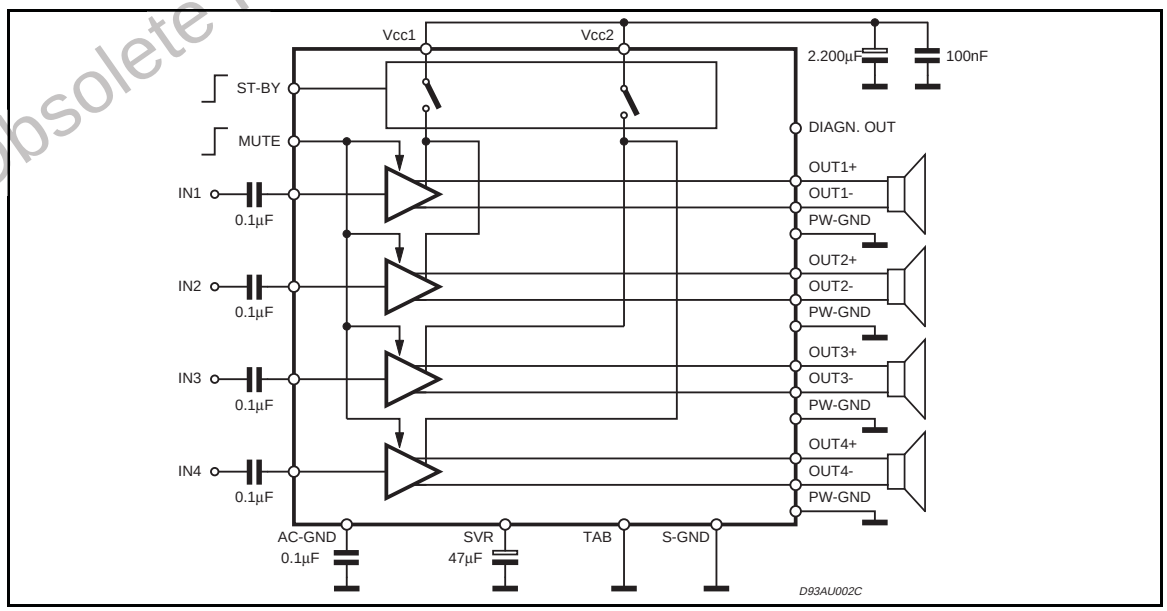

Obsolete Product(s) - Obsolete Product(s)

DESCRIPTION (continued)

Thanks to the fully complementary PNP/NPN output configuration the TDA7383 allows a rail to rail output voltage swing with no need of bootstrap capacitors. The extremely reduced components count allows very compact sets.

The on-board clipping detector simplifies gain compression operations. The fault diagnostics makes it possible to detect mistakes during Car-Radio assembly and wiring in the car.

ABSOLUTE MAXIMUM RATINGS

Symbol	Parameter	Value	Unit
V_{CC}	Operating Supply Voltage	18	V
$V_{CC\ (DC)}$	DC Supply Voltage	28	V
$V_{CC\ (pk)}$	Peak Supply Voltage (t = 50ms)	50	V
I_O	Output Peak Current: Repetitive (Duty Cycle 10% at f = 10Hz) Non Repetitive (t = 100µs)	 4.5 5.5	 A A
P_{tot}	Power dissipation, (T_{case} = 70°C)	80	W
T_j	Junction Temperature	150	°C
T_{stg}	Storage Temperature	– 55 to 150	°C

PIN CONNECTION (Top view)

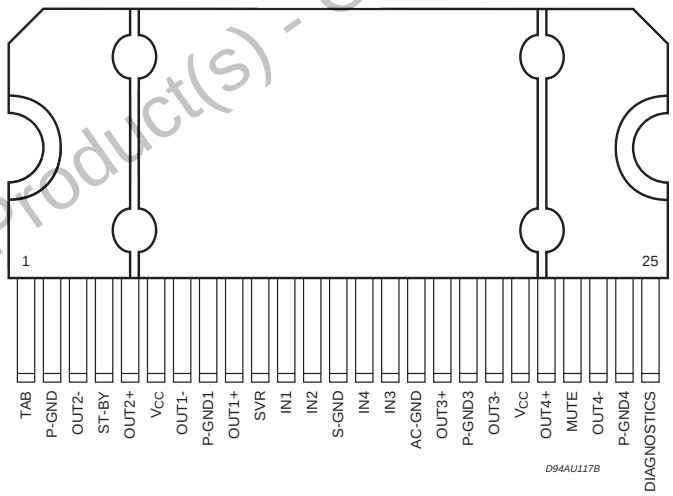

THERMAL DATA

Symbol	Parameter		Value	Unit
$R_{th\ j\text{-}case}$	Thermal Resistance Junction to Case	Max.	1	°C/W

Obsolete Product(s) - Obsolete Product(s)

ELECTRICAL CHARACTERISTICS (V_S = 14.4V; f = 1KHz; R_L = 4Ω; T_{amb} = 25°C; Refer to the Test and application circuit (fig.1), unless otherwise specified.)

Symbol	Parameter	Test Condition	Min.	Typ.	Max.	Unit
I_{q1}	Quiescent Current			180	300	mA
V_{OS}	Output Offset Voltage				200	mV
G_v	Voltage Gain		31	32	33	dB
P_o	Output Power	THD = 10% THD = 1% THD = 10%; V_S = 14V THD = 5%; V_S = 14V THD = 1%; V_S = 14V THD = 10%; V_S = 13.2V THD = 1%; V_S = 13.2V	20 16.5 19 17 16 17 14	22 18 21 19 17 18.5 15		W W W W W W W
$P_{o\ EIAJ}$	EIAJ Ouput Power (*)	VS = 13.7V	27.5	30		W
$P_{o\ max.}$	Max. Output Power (*)	V_S = 14.4V	33	35		W
THD	Distortion	P_o = 4W		0.05	0.3	%
e_{No}	Output Noise	"A" Weighted Bw = 20Hz to 20KHz		75 100	 150	µV µV
SVR	Supply Voltage Rejection	f = 100Hz	50	65		dB
f_{cl}	Low Cut-Off Frequency			20		Hz
f_{ch}	High Cut-Off Frequency		75			KHz
R_i	Input Impedance		70	100		KΩ
C_T	Cross Talk	f = 1KHz	50	70		dB
I_{SB}	St-By Current Consumption	St-By = LOW			50	µA
$V_{SB\ out}$	St-By OUT Threshold Voltage	(Amp: ON)	3.5			V
$V_{SB\ IN}$	St-By IN Threshold Voltage	(Amp: OFF)			1.5	V
A_M	Mute Attenuation	V_O = 1Vrms	80	90		dB
$V_{M\ out}$	Mute OUT Threshold Voltage	(Amp: Play)	3.5			V
$V_{M\ in}$	Mute IN Threshold Voltage	(Amp: Mute)			1.5	V
$I_{m\ (L)}$	Muting Pin Current	V_{MUTE} = 1.5V (Source Current)	5	10	16	µA
I_{CDOFF}	Clipping Detector "OFF" Output Average Current	THD = 1% (**)		100		µA
I_{CDON}	Clipping Detector "ON" Output Average Current	THD = 10% (**)	100	240	350	µA

(*) Saturated square wave output.
(**) Diagnostics output pulled-up to 5V with 10KΩ series resistor.

Obsolete Product(s) - Obsolete Product(s)

Figure 1: Standard Test and Application Circuit

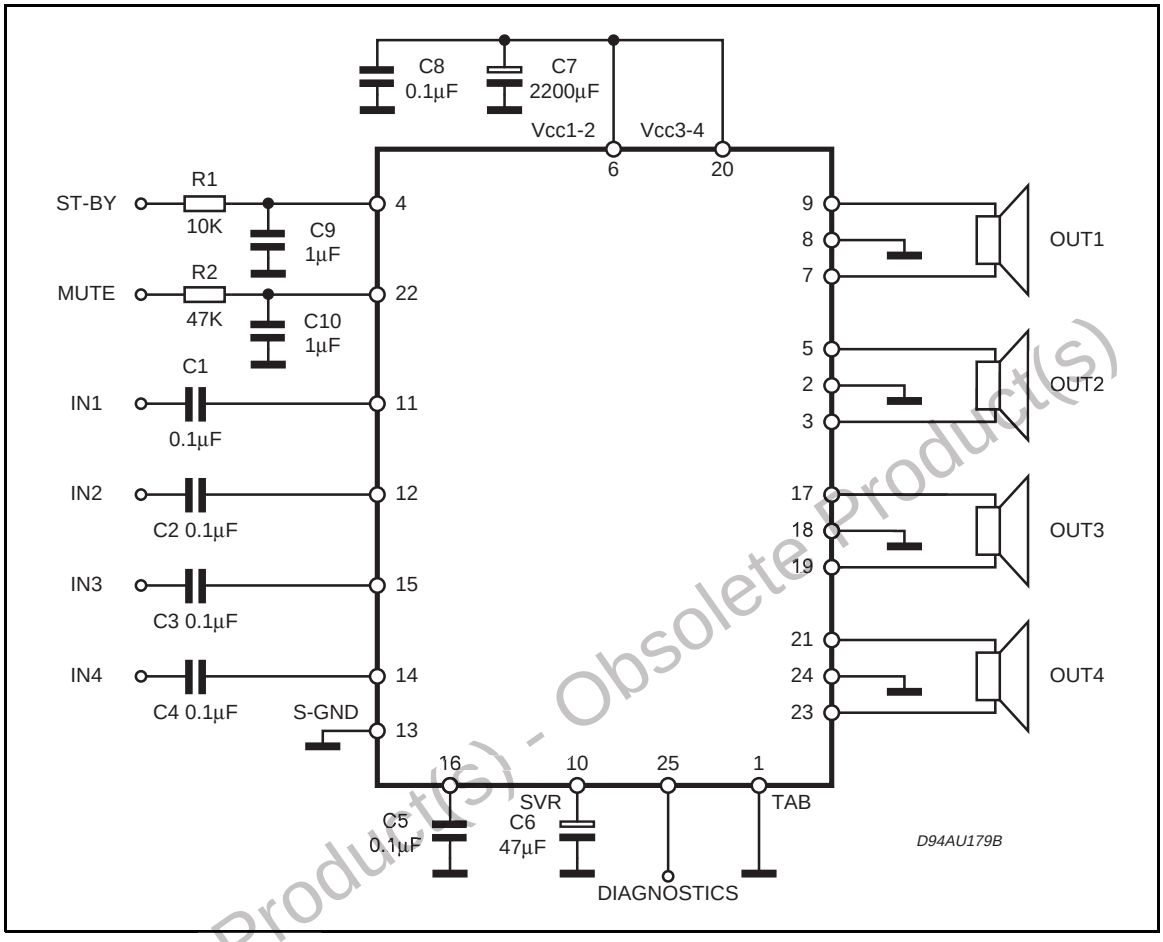

Obsolete Product(s) - Obsolete Product(s)

Figure 2: P.C.B. and component layout of the figure 1 (1:1 scale)

COMPONENTS & TOP COPPER LAYER

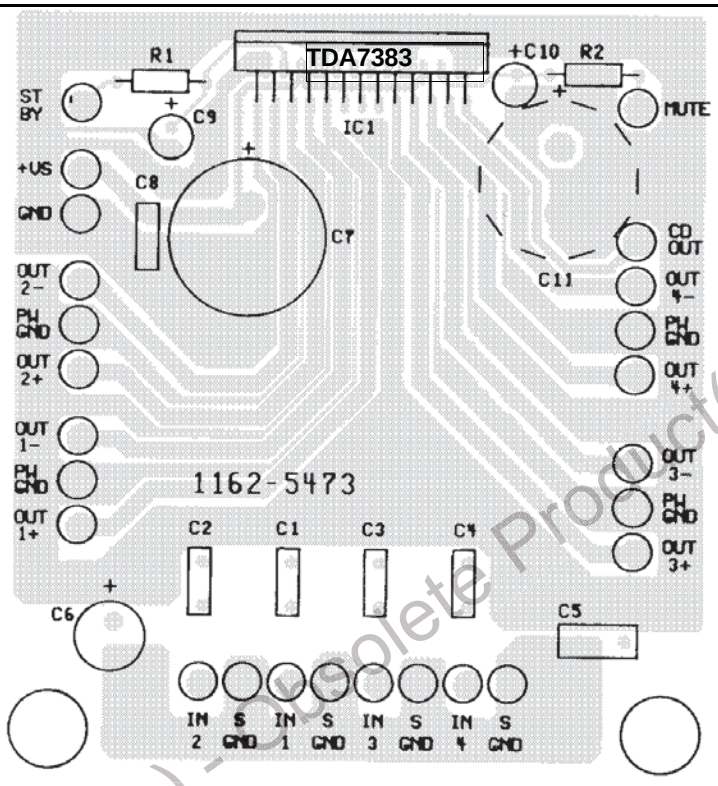

BOTTOM COPPER LAYER

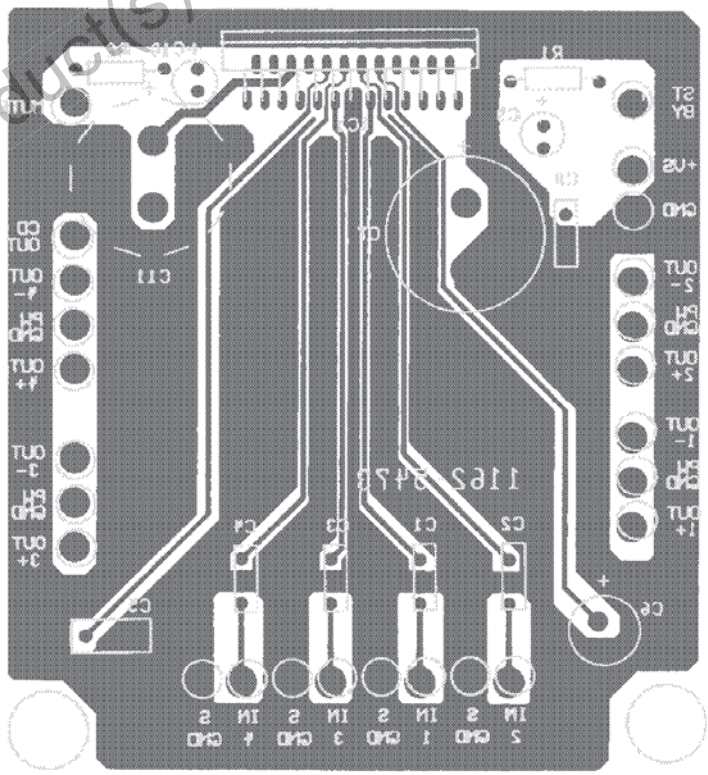

Obsolete Product(s) - Obsolete Product(s)

Figure 3: Quiescent Current vs. Supply Voltage

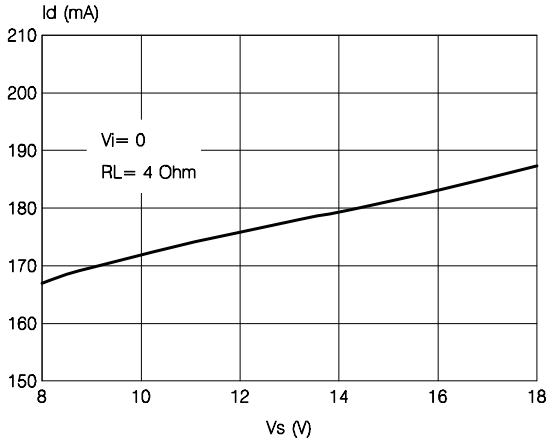

Figure 4: Quiescent Output Voltage vs. Supply Voltage

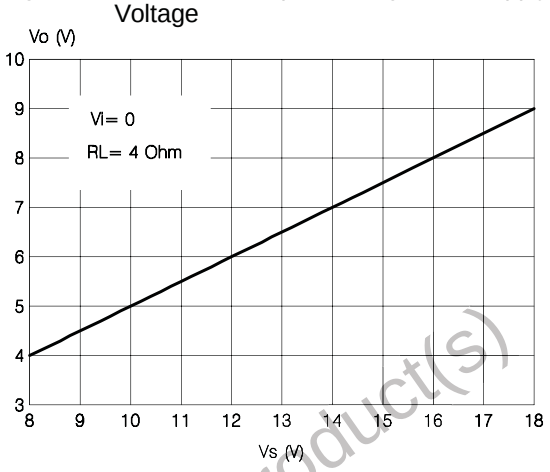

Figure 5: Output Power vs. Supply Voltage

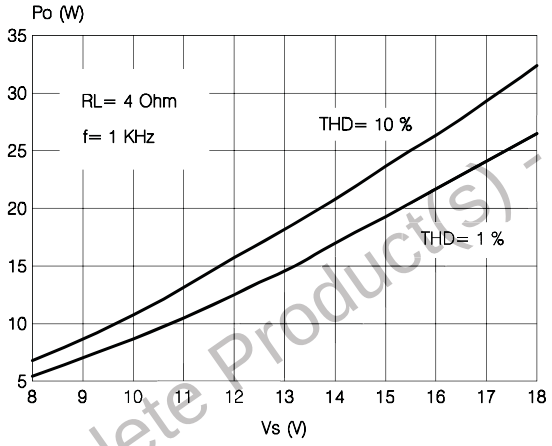

Figure 6: Distortion vs. Output Power

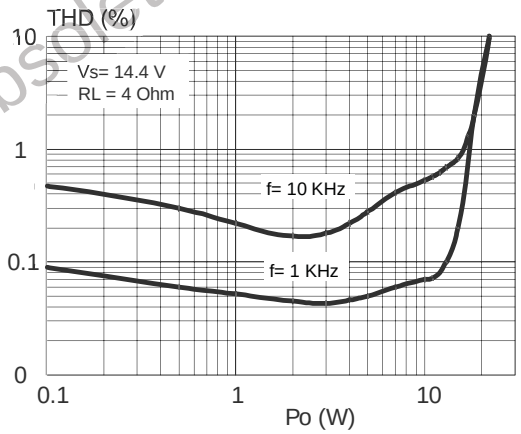

Figure 7: Distortion vs. Frequency.

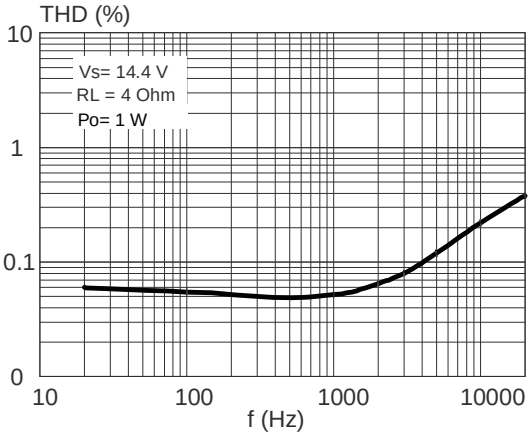

Figure 8: Supply Voltage Rejection vs. Frequency

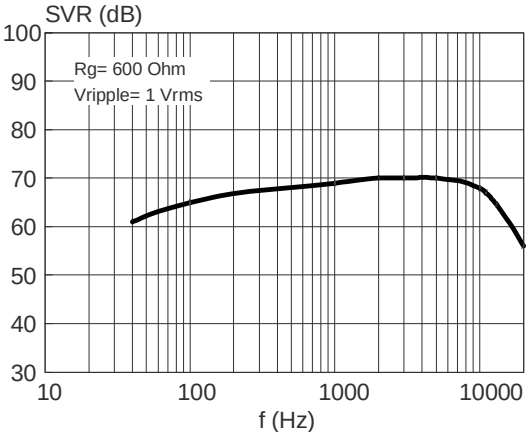

Obsolete Product(s) - Obsolete Product(s)

Figure 9: Output Noise vs. Source Resistance

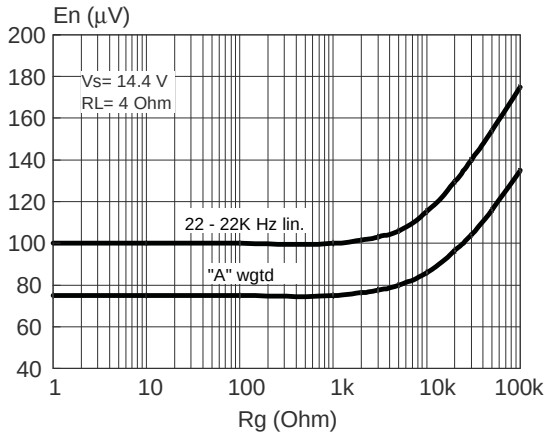

Figure 10: Power Dissipation & Efficiency vs. Output Power

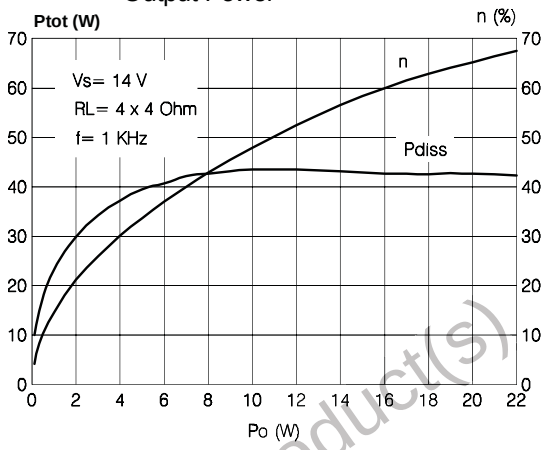

APPLICATION HINTS (ref. to the circuit of fig. 1)

BIASING AND SVR

As shown by fig. 11, all the TDA7383's main sections, such as INPUTS, OUTPUTS AND AC-GND (pin 16) are internally biased at half Supply Voltage level (Vs/2), which is derived from the Supply Voltage Rejection (SVR) block. In this way no current flows through the internal feedback network.

The AC-GND is common to all the 4 amplifiers and represents the connection point of all the inverting inputs.

Both individual inputs and AC-GND are connected to Vs/2 (SVR) by means of 100KΩ resistors.

To ensure proper operation and high supply voltage rejection, it is of fundamental importance to provide a good impedance matching between INPUTS and AC-GROUND terminations. This implies that **C_1, C_2, C_3, C_4, C_5 CAPACITORS HAVE TO CARRY THE SAME NOMINAL VALUE AND THEIR TOLERANCE SHOULD NEVER EXCEED ±10 %.**

Besides its contribution to the ripple rejection, the SVR capacitor governs the turn ON/OFF time sequence and, consequently, plays an essential role in the pop optimization during ON/OFF transients. To conveniently serve both needs, **ITS MINIMUM RECOMMENDED VALUE IS 10µF**.

Figure 11: Input/Output Biasing.

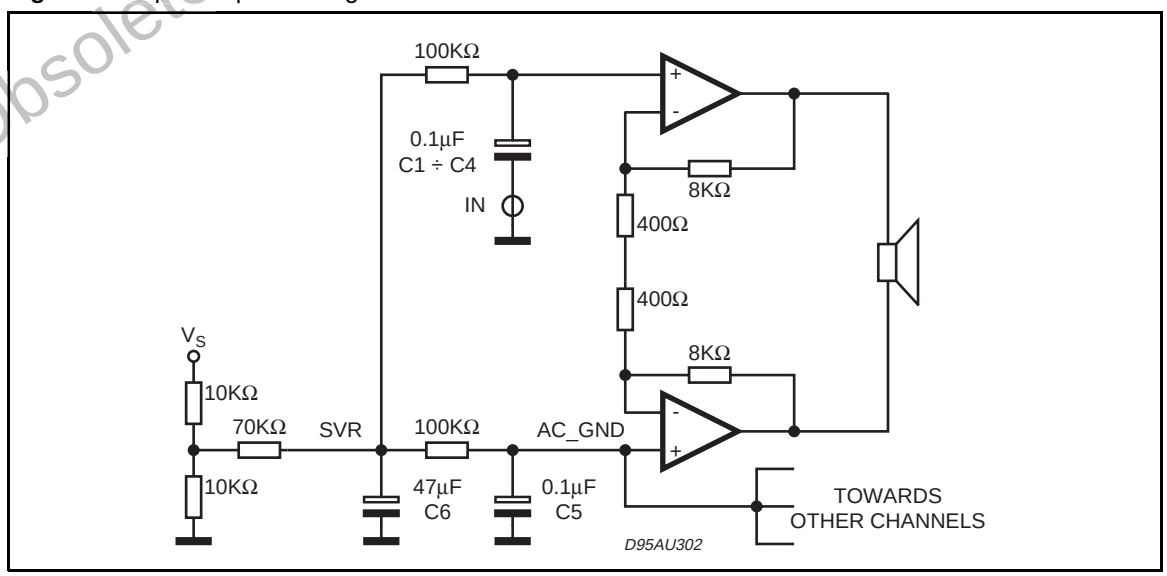

Obsolete Product(s) - Obsolete Product(s)

INPUT STAGE

The TDA7383's inputs are ground-compatible and can stand very high input signals (± 8Vpk) without any performances degradation.

If the standard value for the input capacitors (0.1µF) is adopted, the low frequency cut-off will amount to 16 Hz.

STAND-BY AND MUTING

STAND-BY and MUTING facilities are both CMOS-COMPATIBLE. If unused, a straight connection to Vs of their respective pins would be admissible. Conventional low-power transistors can be employed to drive muting and stand-by pins in absence of true CMOS ports or microprocessors.

R-C cells have always to be used in order to smooth down the transitions for preventing any audible transient noises.

Since a DC current of about 10 uA normally flows out of pin 22, the maximum allowable muting-series resistance (R_2) is 70KΩ, which is sufficiently high to permit a muting capacitor reasonably small (about 1µF).

If R_2 is higher than recommended, the involved risk will be that the voltage at pin 22 may rise to above the 1.5 V threshold voltage and the device will consequently fail to turn OFF when the mute line is brought down.

About the stand-by, the time constant to be assigned in order to obtain a virtually pop-free transition has to be slower than 2.5V/ms.

DIAGNOSTICS FACILITY

The TDA7383 is equipped with a diagnostics circuitry able to detect the following events:

- CLIPPING in the output stage
- OVERHEATING (THERMAL SHUT-DOWN proximity)
- OUTPUT MISCONNECTIONS (OUT-GND & OUT-Vs shorts)

Diagnostics information is available across an open collector output located at pin 25 (fig. 12) through a current sinking whenever at least one of the above events is recognized.

Among them, the **CLIPPING DETECTOR** acts in a way to output a signal as soon as one or more power transistors start being saturated.

As a result, the clipping-related signal at pin 25 takes the form of pulses, which are perfectly syncronized with each single clipping event in the music program and reflect the same duration time (fig. 13). Applications making use of this facility usually operate a filtering/integration of the pulses train through passive R-C networks and realize a volume (or tone bass) stepping down in association with microprocessor-driven audioprocessors.

The maximum load that pin 25 can sustain is 1KΩ.

Due to its operating principles, the clipping detector has to be viewed mainly as a power-dependent feature rather than frequency-dependent. This means that clipping state will be immediately signaled out whenever a fixed power level is reached, regardless of the audio frequency.

Figure 12: Diagnostics circuit.

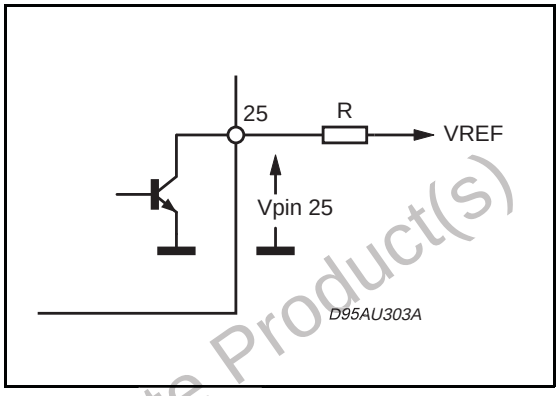

Figure 13: Clipping Detection Waveforms.

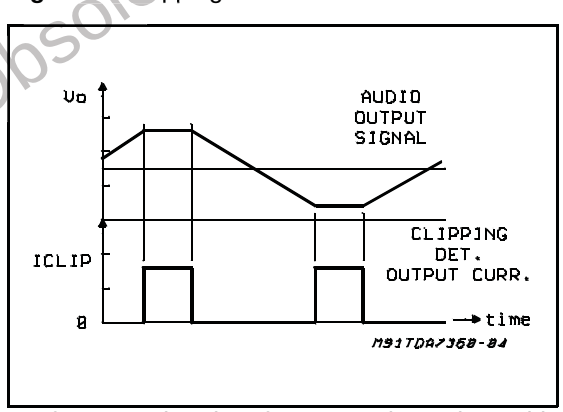

In other words, this feature offers the means to counteract the extremely sound-damaging effects of clipping, caused by a sudden increase of odd order harmonics and appearance of serious intermodulation phenomena.

Another possible kind of distortion control could be the setting of a maximum allowable THD limit (e.g. 0.5 %) over the entire audio frequency range. Besides offering no practical advantages, this procedure cannot be much accurate, as the non-clipping distortion is likely to vary over frequency.

In case of **OVERHEATING**, pin 25 will signal out the junction temperature proximity to the thermal shut-down threshold. This will typically start about 2°C before the thermal shut-down threshold is

Obsolete Product(s) - Obsolete Product(s)

Figure 14: Diagnostics Waveforms.

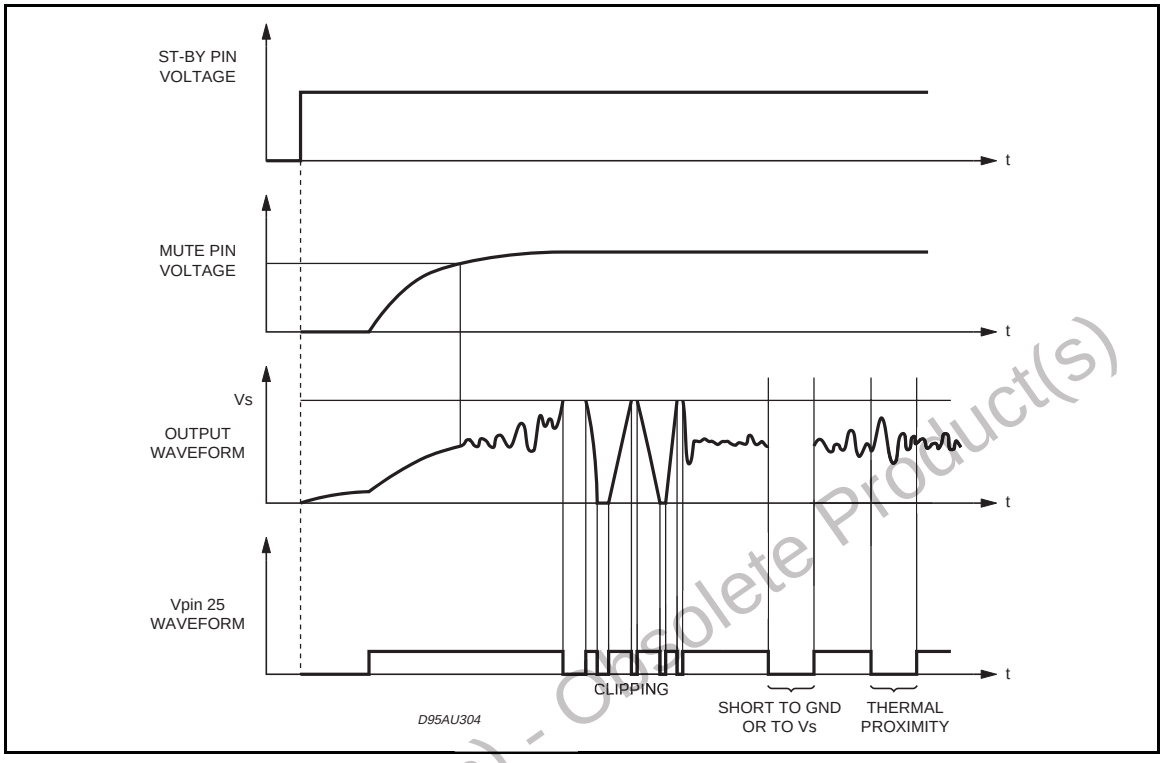

reached.

As various kind of diagnostics information is available at pin 25 (CLIPPING, SHORTS AND OVERHEATING), it may be necessary to operate some distinctions on order to treat each event separately. This could be achieved by taking into account the intrinsically different timing of the diagnostics output under each circumstance.

In fact, clipping will produce pulses normally much shorter than those present under faulty conditions. An example of circuit able to distinguish between the two occurrences is shown by fig. 15.

STABILITY AND LAYOUT CONSIDERATIONS

If properly layouted and hooked to standard car-radio speakers, the TDA7383 will be intrinsically stable with no need of external compensations

Figure 15.

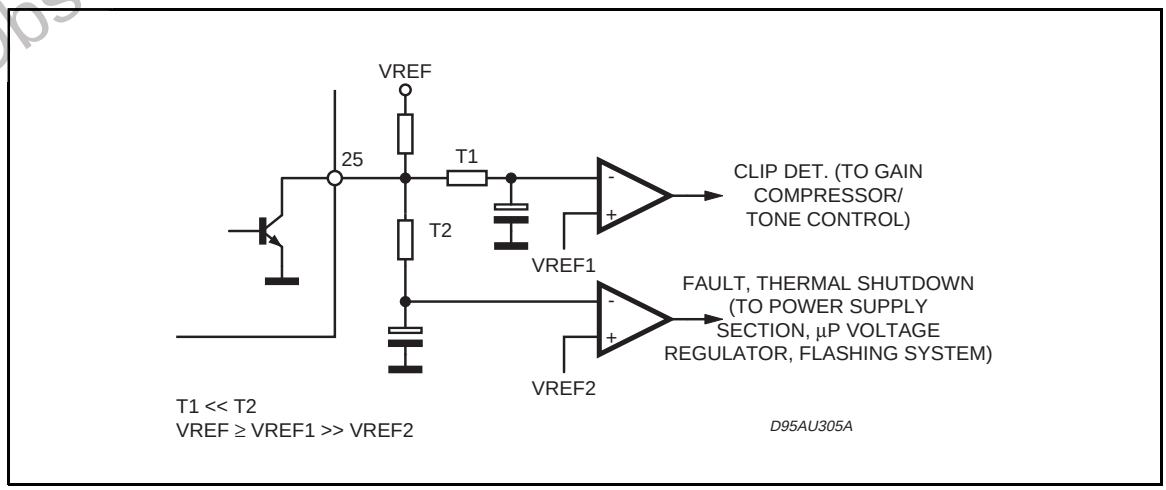

Obsolete Product(s) - Obsolete Product(s)

such as output R-C cells. Due to the high number of channels involved, this translates into a very remarkable components saving if compared to similar devices on the market.

To simplify pc-board layout designs, each amplifier stage has its own power ground externally accessible (pins 2,8,18,24) and one supply voltage pin for each couple of them.

Even more important, this makes it possible to achieve the highest possible degree of separation among the channels, with remarkable benefits in terms of cross-talk and distortion features.

About the layout grounding, it is particularly important to connect the AC-GND capacitor (C_5) to the signal GND, as close as possible to the audio inputs ground: this will guarantee high rejection of any common mode spurious signals.

The SVR capacitor (C_6) has also to be connected to the signal GND.

Supply filtering elements (C_7, C_8) have naturally to be connected to the power-ground and located as close as possible to the Vs pins.

Pin 1, which is mechanically attached to the device's tab, needs to be tied to the cleanest power ground point in the pc-board, which is generally near the supply filtering capacitors.

Obsolete Product(s) - Obsolete Product(s)

DIM.	mm			inch		
	MIN.	TYP.	MAX.	MIN.	TYP.	MAX.
A	4.45	4.50	4.65	0.175	0.177	0.183
B	1.80	1.90	2.00	0.070	0.074	0.079
C		1.40			0.055	
D	0.75	0.90	1.05	0.029	0.035	0.041
E	0.37	0.39	0.42	0.014	0.015	0.016
F (1)			0.57			0.022
G	0.80	1.00	1.20	0.031	0.040	0.047
G1	23.75	24.00	24.25	0.935	0.945	0.955
H (2)	28.90	29.23	29.30	1.138	1.150	1.153
H1		17.00			0.669	
H2		12.80			0.503	
H3		0.80			0.031	
L (2)	22.07	22.47	22.87	0.869	0.884	0.904
L1	18.57	18.97	19.37	0.731	0.747	0.762
L2 (2)	15.50	15.70	15.90	0.610	0.618	0.626
L3	7.70	7.85	7.95	0.303	0.309	0.313
L4		5			0.197	
L5		3.5			0.138	
M	3.70	4.00	4.30	0.145	0.157	0.169
M1	3.60	4.00	4.40	0.142	0.157	0.173
N		2.20			0.086	
O		2			0.079	
R		1.70			0.067	
R1		0.5			0.02	
R2		0.3			0.12	
R3		1.25			0.049	
R4		0.50			0.019	
V	5° (Typ.)					
V1	3° (Typ.)					
V2	20° (Typ.)					
V3	45° (Typ.)					

(1): dam-bar protusion not included
(2): molding protusion included

OUTLINE AND MECHANICAL DATA

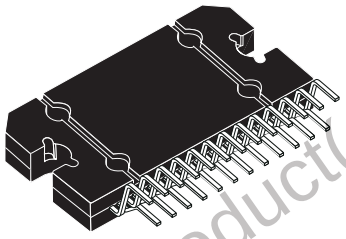

Flexiwatt25

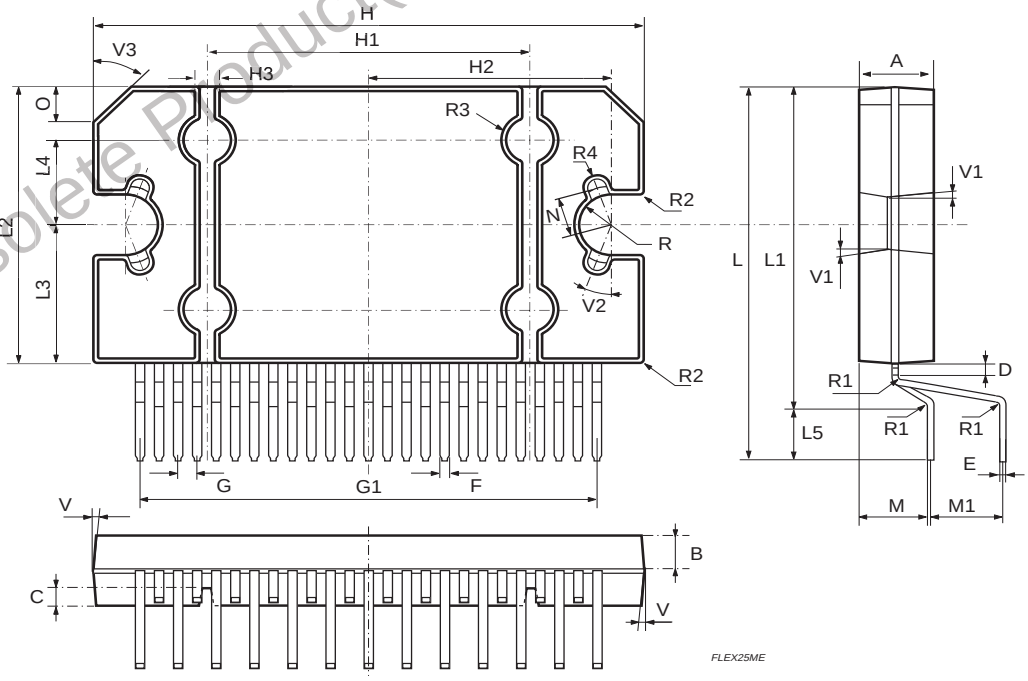

Obsolete Product(s) - Obsolete Product(s)

Obsolete Product(s) - Obsolete Product(s)

Information furnished is believed to be accurate and reliable. However, STMicroelectronics assumes no responsibility for the consequences of use of such information nor for any infringement of patents or other rights of third parties which may result from its use. No license is granted by implication or otherwise under any patent or patent rights of STMicroelectronics. Specification mentioned in this publication are subject to change without notice. This publication supersedes and replaces all information previously supplied. STMicroelectronics products are not authorized for use as critical components in life support devices or systems without express written approval of STMicroelectronics.

The ST logo is a registered trademark of STMicroelectronics

© 2001 STMicroelectronics – Printed in Italy – All Rights Reserved

STMicroelectronics GROUP OF COMPANIES

Australia - Brazil - China - Finland - France - Germany - Hong Kong - India - Italy - Japan - Malaysia - Malta - Morocco - Singapore - Spain - Sweden - Switzerland - United Kingdom - U.S.A.

http://www.st.com